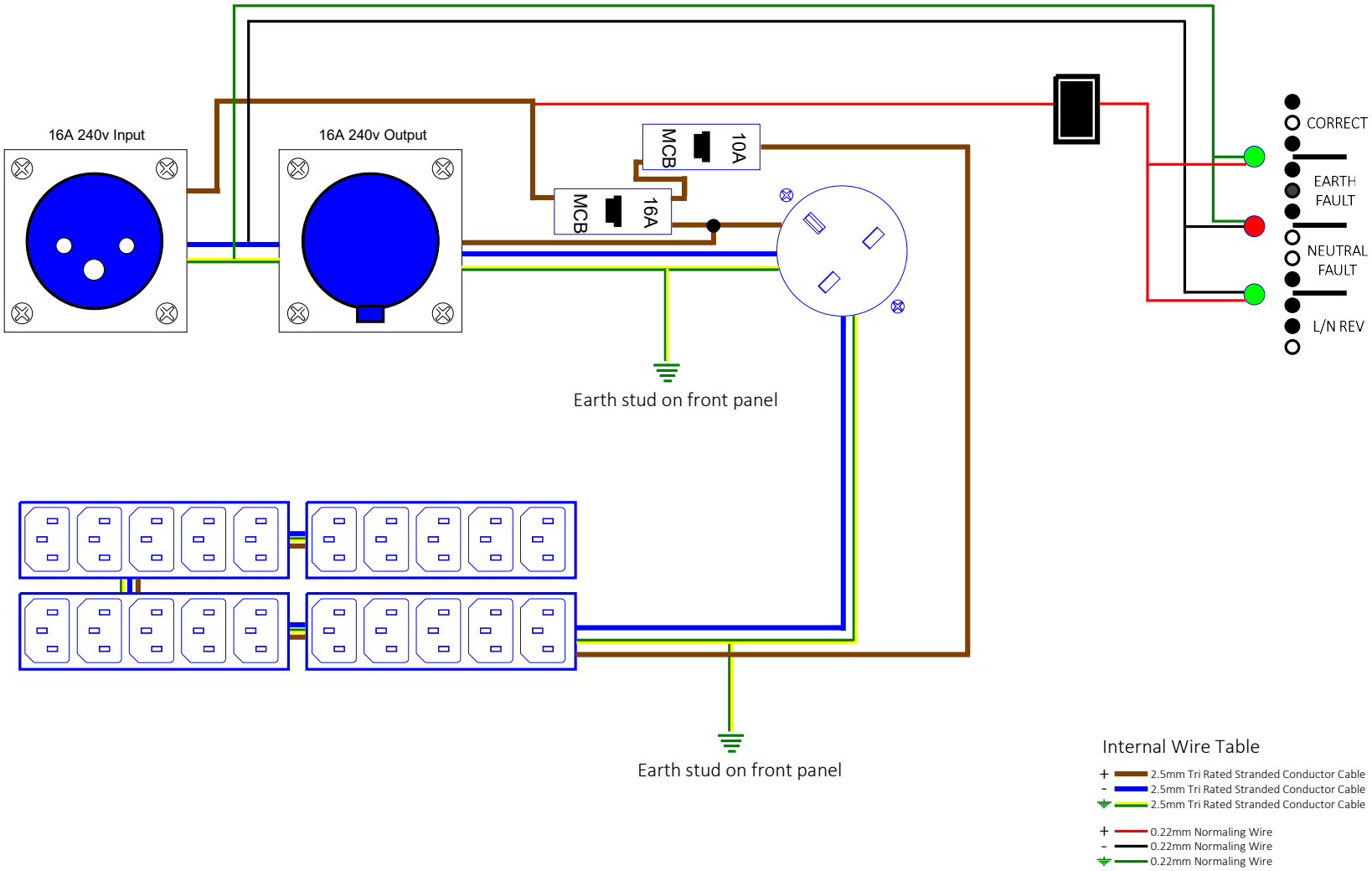

Description:	Date:			
Kelsey PD20/16 Wiring Schematic	23rd March 2023		www.kelseyacoustic.co.uk	Kelsey Acoustics Ltd 38 Cromwell Road Luton Bedfordshire, LU3 1DN T: 01582 870 315 kasales@kesleyacoustic.co.uk
	Drawn By: TT			